# FTTx solutions

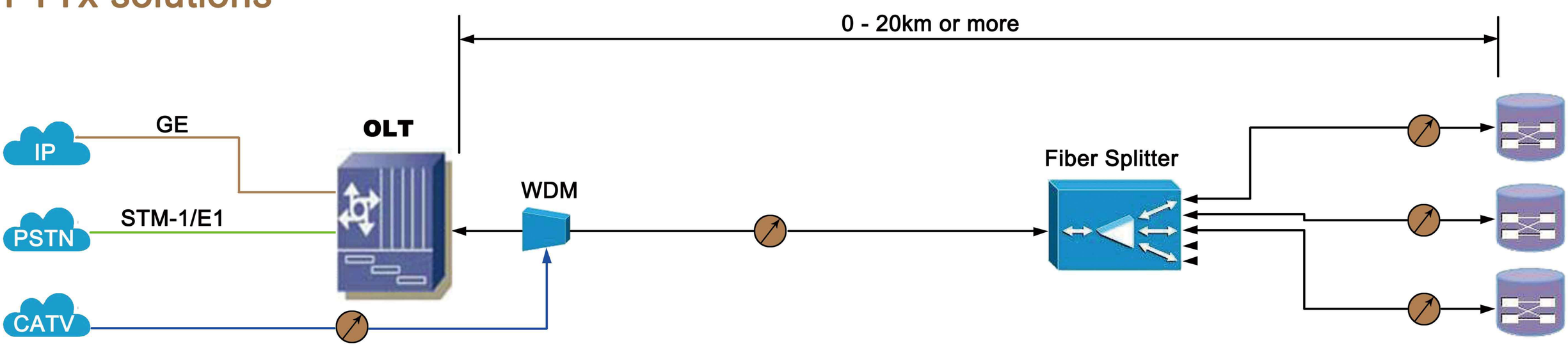


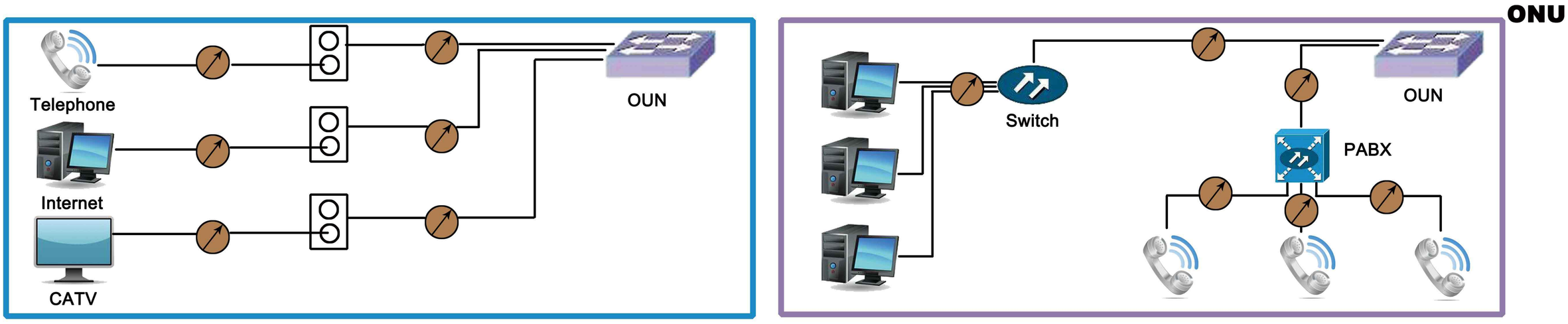


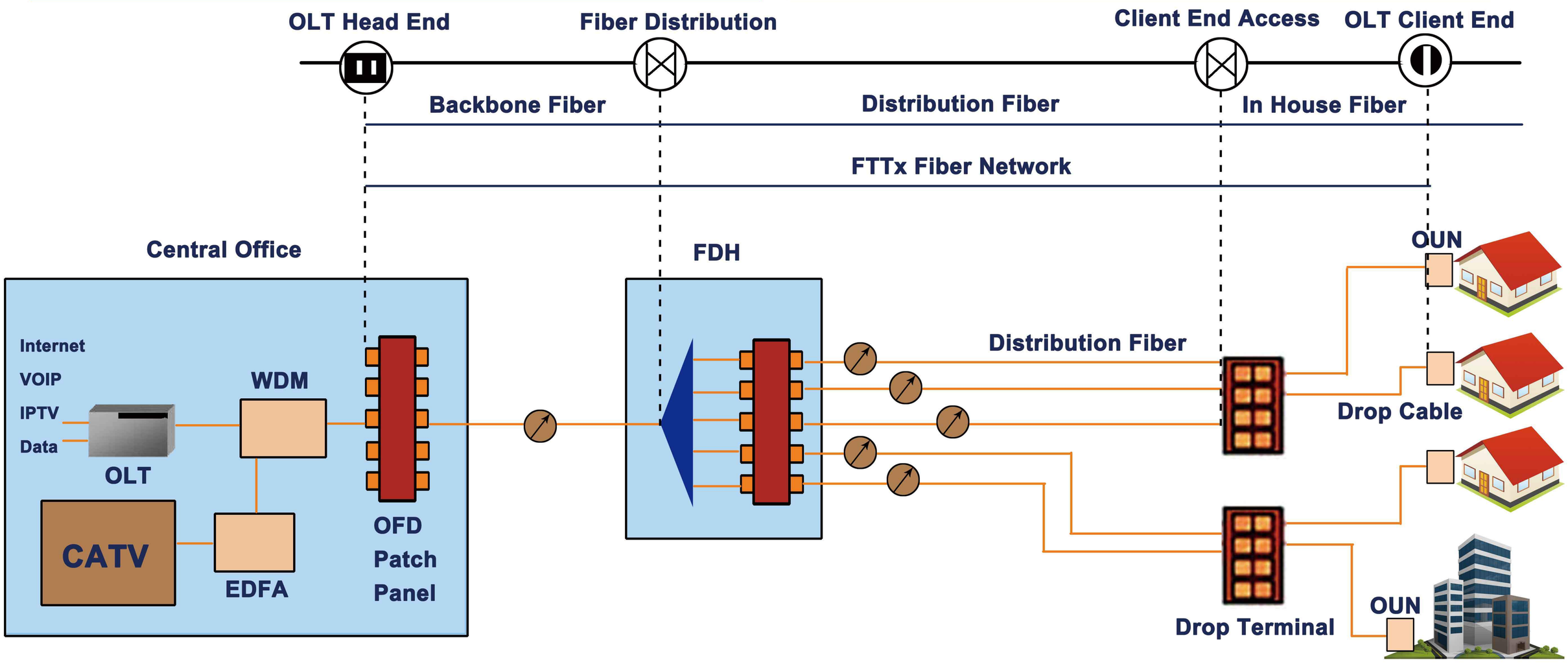


## Products

OTDR

Optical Power Meter

PON Optical Power Meter

Light Source

Variable Attenuator

Optical Multimeter

Optical Fiber Identifier

Optical talk set

**Please visit *NEW* web site!**

http://www.maxwellon.com


**MAXWELLON ELECTRONIC INSTRUMENTS CO.,LTD.**
NO.153 Zhuzhou Rd.,Laoshan District, Qingdao 266100, China.
Tel: 0086-532-80977508 Fax: 0086-532-80977508
E-mail: Sales@Maxwellon.com



■ Specifications are subject to change with prior notice.



Designed in china
9387-MWSI-ME983(2016.9.10)
(TP)